6380B系列

厚料平缝机系列产品 Heavy duty lockstitch sewing machine

零件手册
Parts Manual

1

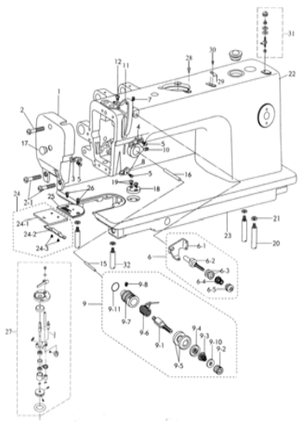

2

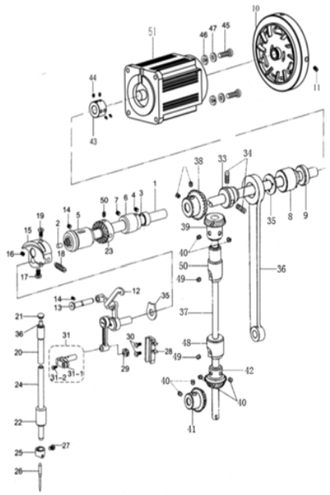

3

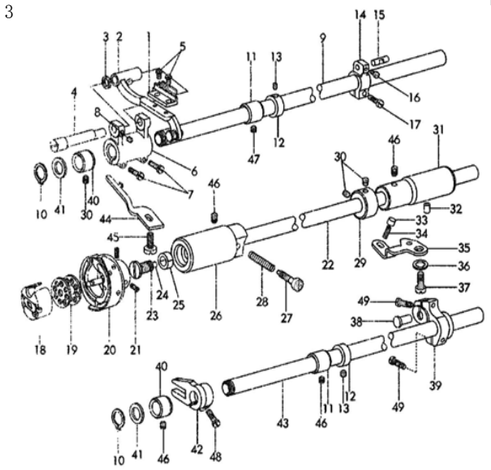

4

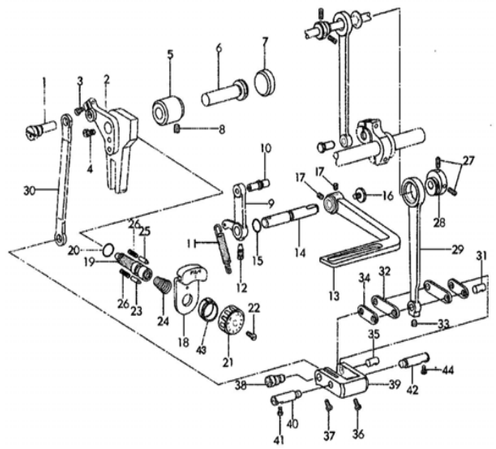

1.机壳、外装分组件/Machine frame & miscellaneous cover components

序号NO.	公司件号 Part NO.	名称 PartName	零件描述 Description	数量 Number
1	301758	面板	Face plate arm	1
2	201S11025	面板螺钉	Screw	1
2-1	13S11047	面板螺钉	Screw	2
3	13512003	面板线勾	Arm thread guide	1
4	13513009	线勾	Arm thread guide	1
5	101S11005	线勾螺钉	Screw	3
6	1351300100	小夹线组件	BOBBIN THREAD TENSIONASM	1
6-1	13512005	小夹线过线板	BOBBIN THREAD TENSION ROD	1
6-2	13S30001	小夹线螺钉	BOBBIN THREAD TENSION ROD	1
6-3	13513002	小夹线板	THREAD TENSION DISK	2
6-4	13627001	小夹线弹簧	CONNECTING ROD SPRING	1
6-5	101S16016	小夹线螺母	NUT	1
7	13S15001	小夹线固定螺钉	SCREW	1
8	13513010	下勾线	FRAME THERAD GUIDE	1
9	1361300400	夹线组件	Thread tension asm	1
9-1	13S30002	夹线螺钉	Thread tension post	1
9-2	101S16001	夹线螺母	Tension mut	1
9-3	13527002	夹线弹簧	Thread tension spring	1
9-4	13513004	松线板	Disk stopper	1
9-5	13513005	夹线板	Thread tension disk	2
9-6	13527003	挑线簧	Takeup spring	1
9-7	13513006	夹线调节座	Thread tension post base	1
9-8	101S15005	夹线调节座螺钉	Screw	1
9-10	13513008	夹线螺母止动板	Tension disc stopper	1
9-11	001050	O型圈	Ring14.5x1.5	1
10	13S11001	夹线调节固定螺钉	Screw	1
11	301760	挑线杆防护罩	Thread tade-up lever cover	1
12	201S11016	挑线杆护罩螺钉	Screw	1
15	13613001	松线钉	Thread release pin	1
16	13613002	松线棒	Thread release pin	1
17	13522001	橡皮塞（φ19）	Rubber plug φ19	1
18	00123002	告位器座	Roler stop seat	1
19	101S11002	螺钉	Screw	2
20	13S520001	底板撑杆（尾部）	Bed screw stud(tail)	2
21	W02004	弹簧垫圈	Spring washer	4
24-1	13515002	推板	Slide plate	1
24-2	13512007	推板簧	Slide plate spring	1
24-3	101S11019	推板螺钉	Screw	2
25	13515001	针板	Throat plate	1
26	101S17002	针板螺钉	Screw	2
27	1143100100	饶线器组件	Bobbin winder unit	1
28	114s11003	饶线器组件固定螺钉	Rubber plug φ10.5	3
29	1143K001	切线刀	THREAD CUTTER	1
30	101s11005	螺钉	SCREW	2
31	403130140O	饶线夹线器组件	BOBBIN THREAD TENSION ASM	1
32	13S520010	底板撑杆(头部)	Bed screw stud(head)	2

2. 上轴挑线分组件/Main shaft & thread take-up components

序号NO.	公司件号 Part NO.	名称 PartName	零件描述 Description	数量Number
1	13602010	上轴	Main shaft	1
2	10122012	上轴橡皮塞	Rubber plug	1
3	13508001	上轴紧圈	Thrust collar asm.	1
4	13S15004	上轴紧圈螺钉	Screw	2
5	13603001	上轴前轴套	Main shaft bushing,front	1
6	13503002	上轴中轴套	Brshing, intermediate	1
7	13S15006	上轴中卷螺钉	Screw	1
8	13605017	上轴后卷	Main shaft bushing,back	1
9	13522010	上轴后轴套油封组件	Main shaft	1
10	13635002	主动轮	Screw	1
11	510009	主动轮螺钉	Screw	2
12	13538003	挑线杆组件	Thread take-up asm	1
13	13502003	挑线杆轻链销	Thread take-up crank shaft	1
14	13S15009	挑线连杆轻链销螺钉	Screw	2
15	13504001	针杆曲柄	Counterweight	1
16	13S12001	挑线曲柄螺钉	Screw	1
17	101S15007	挑线曲柄定位螺钉	Screw	1
18	101S15004	针杆曲柄螺钉	Screw	1
19	13S11002	针杆曲柄定位螺钉	Screw	1
20	13503006	针杆上衬套	Needle bar metal,upper	1
21	10122013	针杆上衬套橡皮塞（φ8.5）	Cap	1
22	13603003	针杆下衬套	Needle bar metal,lower	1
23	11435013	驱动轮	BTW-DRIVING-WHEEL	1
24	13602002	针杆	Needle bar	1
25	13513011	针杆过线环	Needle bar thread guide	1
26	13517001	机针	Needle	1
27	101S11006	夹针螺钉	Screw	1
28	13609001	滑块槽	Needle bar trough	1
29	11409001	针杆接头滑块	Slide block	1
30	101S11008	滑块导轨螺钉	Screw	2
31		针杆接头组件	Needle bar connection asm.	1
31-1	10138002	针杆接头	Needle bar connection	1
31-2	101S11005	针杆接头螺钉	Screw	1
32	201S11009	软线固定板螺钉	Screw	1
33	13510001	挑牙凸轮		1
34	13S15007	挑牙凸轮螺钉	Screw	3
35	13528002	凸轮隔离片	Thrust collar	1
36	13505001	挑牙连杆	Connecting rod	1
37	13502002	饶轴	Uprig shaft	1
38	13525001	上轴伞齿轮	Gear asm.	1
39	13525002	饶轴伞齿轮（上）	Gear asm.	1
40	101S15007	螺钉	Screw	8
41	13523003	下轴伞齿轮	Pinion asm.	1
42	13525004	饶轴伞齿轮（下）	Gear asm.	1
43	13603018	跟轴器		1
44	510037	跟轴器螺钉	Screw	4
45	114S13001	电机安装螺钉		4
46		弹簧垫圈		4
47		垫圈		4
48	13503005	饶轴轴套（下）	Uprig shaft bushing,ower	1
49	13S15008	螺钉	Screw	2
50	13503004	饶轴轴套（上）	Bushing,upper	1
51	13633002O0	电机（珞星）（D型）	Motor (QiXing) (D)	1

3.抬牙、送布、勾线部件 Feed Dog Lift And Feed And Thread Looping

序号NO.	公司件号 Part NO.	名称 PartName	零件描述 Description	数量 Number
1	13514001	送布牙	Feed dog	1
2	1350700300	牙架小组件	Feed bar asm	1
3	13528004	垫圈	Washer	1
4	13502005	牙架销	Feed bar shaft	1
5	101S11018	螺钉	Screw	2
6	13504003	牙架座	Feed rocker asm.	1
7	101S11016	曲柄螺钉	Screw	2
8	101S11008	螺钉	Screw	1
9	13502006	送布轴	Feed rocker shaft	1
10	H03001	轴用弹性挡圈15	Retaining ring	2
11	13503008	抬牙、送布轴中轴套	Thrust collar asm.	2
12	13508001	挡圈		2
13	13S15004	螺钉	Screw	4
14	13504004	送布曲柄（右）	Feed rocker shaft crank asm	1
15	13526001	送布曲柄短销	Walking foot pin	1
16	101S11025	螺钉	Screw	1
17	10S11019	螺钉	Screw	1
18	10818502	钩壳	Hook asm	1
19	10818501	钩芯	Bobbin	1
20	10818001	旋梭	Hook asm	1
21	13S515020	旋梭螺钉	Screw	3
22	13502007	下轴	Hook driving shaft	1
23	13S520007	下轴波油螺钉	Screw	1
24	11423003	下轴波油塞	Oil wick	1
25	10122015	下轴油封	Oil seal	1
26	13503009	下轴前轴套	Bushing,front	1
27	13S520008	油量调节螺钉	Oil adjusting screw	1
28	13527005	油量调节弹簧	Spring	1
29	10108002	下轴挡圈	Thtust collar asm.	1
30	101S11012	螺钉	Screw	3
31	13503010	下轴后轴套	Bushing,rear	1
32	13521001	下轴轴套油管	Oil pipe for hook shaft bushing	1
33	13502008	柱塞	Plunger	1
34	13527006	柱塞弹簧	Plunger spring	1
35	13512009	档板	Guide plate	1
36	W02004	档板螺钉弹簧垫圈6	Washer	1
37	13S11019	档板螺钉	Screw	1
38	13502009	抬牙曲柄铰链轴	Hinge pin	1
39	13504005	抬牙右曲柄	Feed lifting rock shaft crank(right)	1
40	13503011	抬牙、送牙轴前轴套	Bushing for feed rock shaft(right)	2
41	13528006	抬牙轴前轴套垫圈	Washer	2
42	13505004	抬牙叉	Feed forked connection	1
43	13502010	抬牙轴	Feed lifting rock shaft	1
44	13512010	旋梭定位勾	Rotating hook positioner	1
45	101S11011	旋梭定位勾螺钉	Screw	1
46	13S15009	抬牙、下轴轴套螺钉	Screw	4
47	13S15006	送布轴套螺钉	Screw	1
48	101S11020	抬牙叉夹紧螺钉	Screw	1
49	201S11027	抬牙右曲柄螺钉	Screw	2

4.送布调节部件 Feed Mechanism

序号NO.	公司件号 Part NO.	名称 PartName	零件描述 Description	数量Number
1	13S10002	针距调节连接销钉	Hinge pin	1
2	13509003	针距座	Feed regulator	1
3	101S11020	针距座长螺钉	Screw	1
4	13SS11009	针距座短螺钉	Screw	1
5	13503012	针距座衬套	Feed regulator bushing	1
6	13502011	针距座轴	Hinge pin for feed regulator	1
7	13522014	橡皮塞（φ19.5）	Rubber plug(φ19.5)	1
8	13SS15009	针距座衬套紧固螺钉	Screw	1
9	13504006	倒缝操作杆曲柄	Slide block pin	1
10	13502012	操作杆曲柄滚柱	Slide block	1
11	13527007	操作杆曲柄弹簧	Spring for feed crank	1
12	13SS15014	操作杆曲柄螺钉	Screw	1
13	13531001	倒缝操作杆	Reverse feed lever	1
14	13502013	倒缝操作杆短轴	Reverse feed lever shaft	1
15	001045	O型圈6.3x1.8	O-ring	1
16	13SS11022	倒缝操作吊紧螺钉	Screw	1
17	13SS11009	扳手螺钉	Screw	2
18	13512011	针距按键	Feed regulator key-press	1
19	13SS30003	针距调节螺杆	Feed regulator screw bar	1
20	001046	O型圈9.5x2.5	O-ring	1
21	13511002	针距标盘	Dial	1
22	101S11022	针距标盘螺钉	Dial screw	1
23	13526004	针距盘挡销	Dial stopper pin	1
24	13527009	针距按键簧	Dial spring for stopper pin	1
25	13526002	止动销	Stopper pin	1
26	13527008	止动销弹簧	Spring for stopper pin	2
27	13SS15007	送布凸轮螺钉	Screw	3
28	13510003	送布凸轮	Feed drive eccentric cam.	1
29	13505005	送布连杆	Rocker shaft connecting rod	1
30	13505006	针距调节连杆	Feed regulator connecting rod	1
31	13502014	曲柄连杆长销	Walking foot link	1
32	13505007	曲柄长连杆	Walking foot pin	2
33	101S11025	送布连杆螺钉	Screw	1
34	13505008	曲柄短连杆	connecting link	2
35	13526003	曲柄连杆短销	Walking foot link	1
36	201S11012	短连杆销螺钉	Screw	1
37	201S11007	连杆偏心轴螺钉	Screw	1
38	13502015	连杆偏心轴	Hinge pin	1
39	13504007	针距调节曲柄	Walking foot adjusting link	1
40	13502016	针距调节曲柄定位销（左）	Adjusting link fulcrum shaft	1
41	10S11019	左右定位销螺钉	Screw	1
42	13502017	针距调节曲柄定位销（右）	Adjusting link fulcrum shaft	1
43	13522007	橡胶塞	Rubber plug	1
44	114s11004	左右定位销螺钉	Screw	1

5

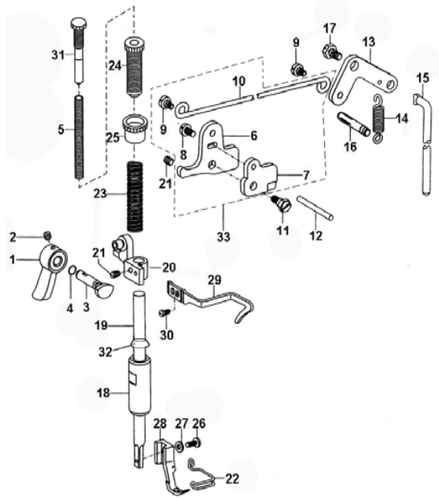

5.压脚部件 Presser Foot

序号NO.	公司件号 Part NO.	名称PartName	零件描述Description	数量Number	
1	13511005	压脚扳手	Presser bar lifter	1	
2	135S15017	压脚扳手螺钉	Set screw	1	
3	13510004	压紧杆提升凸轮	Presser bar lifting cam	1	
4	001009	O型圈4.5X1.8	O-ring	1	
5	13527012	辅助调压弹簧	Presser spring	1	
6	13512013	膝腔提升杠杆（左）	Knee lifter lever (left)	1	
7	13510005	松线凸轮	Tension releasing cam	1	
8	135S11026	膝腔提升杠杆（左）螺钉	Knee lifter lever (left) screw	1	
9	135S11027	铰链螺钉	Hinged screw	2	
10	13512014	膝腔提升拉杆	Knee lifter rod	1	
11	135S11028	松线凸轮螺钉	Screw	1	
12	13502018	松线杆	Tension releasing pin	1	
13	13512015	膝腔提升杠杆（右）	Knee lifter lever (right)	1	
14	13527010	膝腔提升杠杆（右）弹簧	Presser spring	1	
15	13512016	膝腔提升杠杆	Knee lifter connecting rod	1	
16	13526005	弹簧销	Pin for spring	1	
17	135S12002	膝腔提升杠杆（右）螺钉	Knee lifter lever (right) screw	1	
18	13503013	压紧杆轴套	Presser bar bushing	1	
19	13502019	压紧杆	Presser bar	1	
20	13505009	压紧杆导架	Presser bar lifting bracket	1	
21	135S15003	压紧杆导架螺钉	Set screw	2	
22	13512017	防护勾	Defend tick off	1	
23	13527011	压紧杆弹簧	Presser spring	1	
24	135S30004	调压螺钉	Lock nut	1	
25	135S16003	调压螺钉锁紧螺母	Set screw	1	
26	101S11009	压脚螺钉	Screw	1	
27	13528007	垫圈	Washer	1	
28	13516001	小压脚	Presser loot complete	1	
29	13513012	大线勾	Upper thread guide	1	
30	101S11002	大线勾螺钉	Screw	1	
31	135S30005	辅助调压螺钉	Auxiliary lock nut	1	
32	10122034	压杆防油套		1	
33	1351201200	膝腔提升杠杆（左）组件	Knee lifter lever (left)asm	1	

6

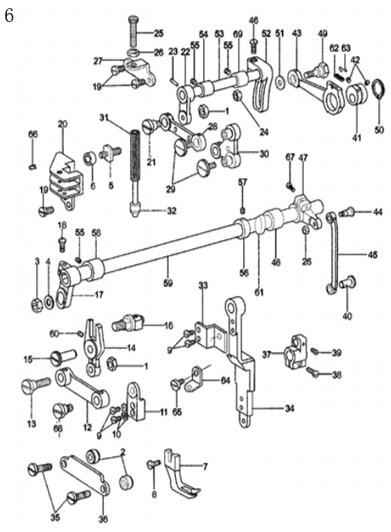

6.上送料部件 Upper feed Parts

序号NO.	公司件号 Part NO.	名称PartName	零件描述Description	数量Number	
1	135S16004	压脚送料变动连接螺母	Nut	2	
2	13508003	压脚连杆压板垫块	Shim	2	
3	135S16005	压脚曲柄连接螺母	Nut	1	
4	#01003	压脚曲柄连接垫圈6	Washer	1	
5	135S30006	送料曲柄导柱轴	Guide shaft	1	
6	13508004	提升压脚导柱轴滚柱	Needle of bearing	1	
7	13516002	摆压脚	Walking foot	1	
8	135S11030	压脚螺钉	Screw	1	
9	301S11007	摆动连杆座螺钉	Screw	4	
10	#02002	摆动连杆座螺钉弹簧垫圈4	Washer	2	
11	13501004	摆压脚杆座	Holder for walking foot bar	1	
12	13505010	摆压脚连杆	Link of walking foot	1	
13	135S20009	压脚送料变动连接螺钉	Screw	1	
14	13505011	摆压脚叉形杆	Fork lever	1	
15	13526006	摆压脚叉形杆销	Pin	1	
16	1350202000	压脚送料变动曲柄轴组件	Crank shaft complete	1	
17	13504008	压脚摆动前曲柄	Presser swing shaft	1	
18	135S11032	前曲柄螺钉	Screw	1	
19	101S11008	提升压脚导位板螺钉	Screw	4	
20	13509004	提升压脚导位板	Lifting presser plate	1	
21	135S20003	压脚送料曲柄连杆螺钉	Screw	1	
22	13504009	压脚升降前曲柄	Presser lifting crank	1	
23	P02009	圆锥销4X20	Pin	1	
24	N02001	六角螺母M6X0.75	Nut	1	
25	135S30007	摆压脚调压螺钉	Lifting presser adjusting screw	1	
26	135S16006	摆压脚调压螺母	Lifting presser adjusting nut	2	
27	13512018	摆压脚调压螺钉架	Lifting presser bracket for spring	1	
28	13505012	压脚送料曲柄连杆	Presser feed crank link	1	
29	135S11034	压脚送料曲柄螺钉	Screw	2	
30	13504010	压脚送料曲柄	Presser feed crank	1	
31	13527013	摆压脚调压杆弹簧	Lifting presser spring	1	
32	1350202100	调压杆弹簧导柱	Presser spring guide	1	
33	13501005	提升压脚导柱定位板	Lifting presser guide plate	1	
34	13501006	摆压脚杆	Presser rod guide	1	
35	116s11005	提升压脚连接压板螺钉	Screw	2	
36	13512019	提升压脚连接压板	Lifting presser sway crank guide pin	1	
37	13504011	送布轴曲柄（中）	Feed rocker shaft crank asm	1	
38	101S11016	送布轴曲柄（中）螺钉	Screw	1	
39	101S11025	大连杆曲柄连接销钉	Screw	1	
40	135S20004	大连杆曲柄连接销	Screw	1	
41	13510006	压脚升降偏心轮	Eccentric wheel	1	
42	101S15007	螺钉	Screw	2	
43	13505013	连杆	Eccentric wheel rod	1	
44	135S20005	压脚摆动后曲柄连杆螺钉	Screw	1	
45	13505014	摆压脚大连杆	Presser swing crank(right)rod	1	
46	135S11035	偏心连杆调节曲柄螺钉	Screw	1	
47	13504012	压脚摆动后曲柄	Presser swing crank(right)	1	
48	13503014	压脚摆动轴中轴套	Presser swing shaft bushing (right)	1	
49	135S20006	偏心轮连杆螺钉	Screw	1	
50	#03012	轴用C型挡圈25	C-type stop ring	1	
51	13528008	垫圈	Washer	1	
52	13504013	偏心连杆调节曲柄	Presser lifting shaft	1	
53	13502022	压脚升降轴	Shaft	1	
54	13503015	摆压脚提升轴套	Presser lifting shaft bushing	1	
55	135S15008	坚轴轴套螺钉	Screw	3	
56	13508001	紧圈	Thrust collar asm.	1	
57	135S15004	紧圈螺钉	Screw	2	
58	13508006	压脚摆动轴前轴套	Presser swing shaft bushing (left)	1	
59	13502023	压脚摆动轴	Presser swing shaft	1	
60	135S15018	摆压脚叉形杆销螺钉	Screw	1	
61	1142200800	摆动轴后套油封	Oil seal	1	
62	13523002	偏心轮连杆油毡	Oil felt for needle bar	1	
63	13527015	偏心轮连杆油毡压簧	Spring	1	
64	13512020	提升压脚导柱架	Lifting presser guide plate	1	
65	135S11036	导柱架螺钉	Screw	1	
66	P03035	弹性圆柱销3X8	Spring plug	2	
67	135S13002	后曲柄螺钉	Screw	1	
68	135S20011	压脚送料连杆螺钉	Screw	1	
69	13503016	摆压脚提升后轴套	Presser lifting shaft bushing	1	

7

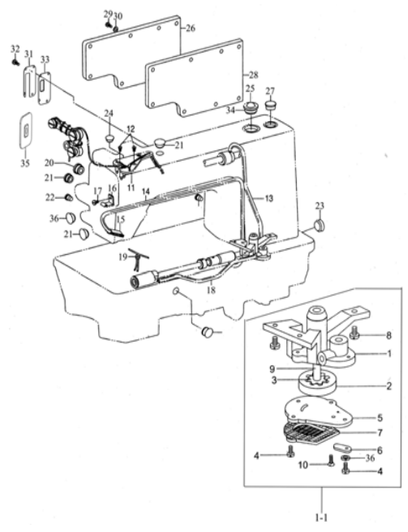

7.油泵部件 Oil pump and Lubrication mechanism

序号NO.	公司件号 Part NO.	名称PartName	零件描述Description	数量Number	
1-1	1352000200	油泵组件	Oil pump asm	1	
1	13520001	油泵体	Oil pump	1	
2	13525005	油泵大齿轮	Big gear for oil pump	1	
3	13525006	油泵小齿轮	Small gear for oil pump	1	
4	135S11037	油泵调节板螺钉	Screw	3	
5	13512021	油泵体盖板	Cover for oil pump	1	
6	13512022	油泵调节板	Adjusting plate for oil pump	1	
7	1351202300	油泵滤网组件	Filter complete	1	
8	105S11019	油泵体螺钉	Screw	3	
9	13502024	油泵体轴轴	Shaft for oil pump	1	
10	S02024	油泵体盖板螺钉	Screw	2	
11	1351202400	油线固定板大组件	Oil wick set plate complete	1	
12	101S11010	油线固定板螺钉	Screw	2	
13	1352100700	上轴油管组件	Oil pipe complete for upper shaft	1	
14	42221001	回油管Φ3XΦ4	Oil return pipe	1	
15	13523003	回油管滤油毡	Oil felt	1	
16	13512025	回油管夹	Pipe return pipe clamp	1	
17	201S11014	回油管夹螺钉	Screw	1	
18	1362100100	下轴油管组件	Oil pipe for arm shaft	1	
18-1	13621001	下轴油管	Oil pipe for shaft	1	
18-2	13636001	下轴油管接头		1	
19	10123004	油线2.5x260/2.5x290	Oil wick	各1	
20	13522001	面板橡皮塞（Φ19）	Rubber plug(Φ19)	1	
21	13522002	面板橡皮塞（Φ11.8）	Rubber plug(Φ11.8)	4	
22	13522003	橡皮塞（Φ8.8	Rubber plugΦ8.8	2	
23	13522004	橡皮塞（Φ27）	Rubber plugΦ27	1	
24	13522005	橡皮塞（Φ5.7）	Rubber plugΦ5.7	1	
25	10111004	油窗	Oil sight window	1	
26	301759	铝盖板	Side plate	1	
27	13522008	橡皮塞（Φ25.5）	Rubber plugΦ25.5	1	
28	13522006	铝盖板密封垫片	Gasket	1	
29	113S11001	铝盖板螺钉	Screw	8	
30	10128003	铝盖板螺钉垫片	Washer	8	
31	301761	小挡油板	Keep off plate	1	
32	101S11005	小挡油板螺钉	Screw	4	
33	13522011	小挡油板垫	Gasket	1	
34	10122019	油窗O型圈	O-ring	1	
35	13522018	大连杆橡胶垫	Rubber gasket	1	
36	#02002	油泵调节板螺钉弹簧垫圈	Spring washer	1	

8

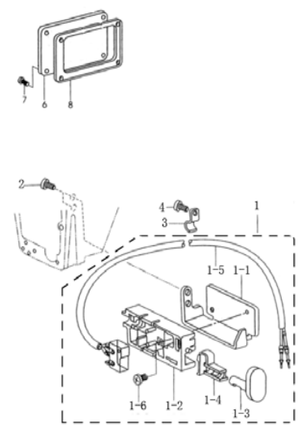

8.开关组件 Switch components

序号NO.	公司件号 Part NO.	名称PartName	零件描述Description	数量Number	
1	1283000100	倒缝电磁铁开关组件	Switch assembly	1	
1-1	13612013	倒缝电磁铁开关安装架	Switch mounting bracket	1	
1-2	13611002	倒缝按键开关座	Switch Block	1	
1-3	13611003	倒缝按键开关	Key switch	1	
1-4	13611004	倒缝电磁铁开关触件	Switch contact member	1	
1-5	13630002	倒缝开关组件	Switch assembly	1	
1-6	136S11014	倒缝按键开关座螺钉	Screw	1	
2	101s11004	开关安装架螺钉	Screw	1	
3		塑料线夹	Clamps	3	
4	101S11002	塑料线夹螺钉	Screw	1	
6	302662	倒缝电磁铁盖板	Backstitch solenoid cover	1	
7	301S11011	倒缝电磁铁螺钉	Screw	4	
8	13628009	倒缝电磁铁罩垫片	Seals	1	

9

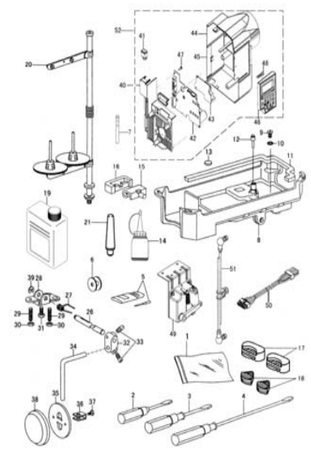

9.附件 Oil Reservoir Accessories

序号NO.	公司件号 Part NO.	名称PartName	零件描述Description	数量Number	
1	40131017	防尘罩	Machine head cover	1	
2	10131004	螺钉起子（小）	Screw driver(small)	1	
3	10131003	螺钉起子（中）	Screw driver(middle)	1	
4	10131002	螺钉起子（大）	Screw driver(large)	1	
5	13517001	机针	Needle	4	
6	10818501	梭芯	Bobbin	5	
7	11212001	过线柱	Needle bar crank	1	
8	13501007	油盘	Oil reservoir	1	
9	135S11041	放油螺钉	Screw	1	
10	001047	放油螺钉垫圈	Washer	1	
11	13523006	油盘垫	Gasket	1	
12	13511006	膝腔提升顶杆	Knee press lifter rod	1	
13	10131001	磁块	Magnet	1	
14	20131038	小油壶	Oil pot	1	
15	10122060	机壳铰链	Rubber coat	2	
16	1011203100	机壳铰链套	Ring	2	
17	10122023	机头防震垫块（大）	Cushion(big)	2	
18	10122022	机头防震垫块（小）	Cushion(small)	2	
19	1011101200	油箱	Oil tank	1	
20	1013100700	线架组件	Spool stand complete	1	
21	10111011	机头支柱	Frame support bar	1	
26	13502025	膝腔铰链轴	Hinge pin	1	
27	13527014	膝腔复位弹簧	Spring	1	
28	13512026	膝腔限位架	Knee lifter stop bracket	1	
29	135S15019	膝腔限位调节螺钉	Screw	2	
30	S01029	调节螺母	Nut	2	
31	135S12003	膝腔限位架螺钉	Screw	1	
32	10101008	碰块弯杆接头	Connector	1	
33	101s12003	碰块弯杆接头螺钉	Screw	2	
34	10112028	膝腔碰块弯杆	Bent rod	1	
35	10112029	膝腔碰块	Bell	1	
36	10112030	碰块架	Bell bracket	1	
37	101s12004	碰块架螺钉	Screw	1	
38	10122024	碰块垫	Pat	1	
39	H05011	开口挡圈	Split stop ring	1	
40		电控散热板	Heat sink	1	
41		电控开关	Electric control switch	1	
42		电路板	Circuit board	1	
43		小电路板	A small circuit board	1	
44		电机罩壳	The motor housings	1	
45		侧盖板	The side cover	1	
46		操作面板	Operation panel	1	
47		电路板连接螺钉	Circuit board connecting screws	6	
48	136S13001	罩壳连接螺钉	Casing connection screws	3	
49		电控脚踏	Electric control pedal	1	
50		电源线	The power cord	1	
51		脚踏连杆	Pedal connecting rod	1	
52	1363302000	简易款电控	Simple model electric control	1	
53	114S30001	罩壳连接螺钉	Casing connection screws	1	